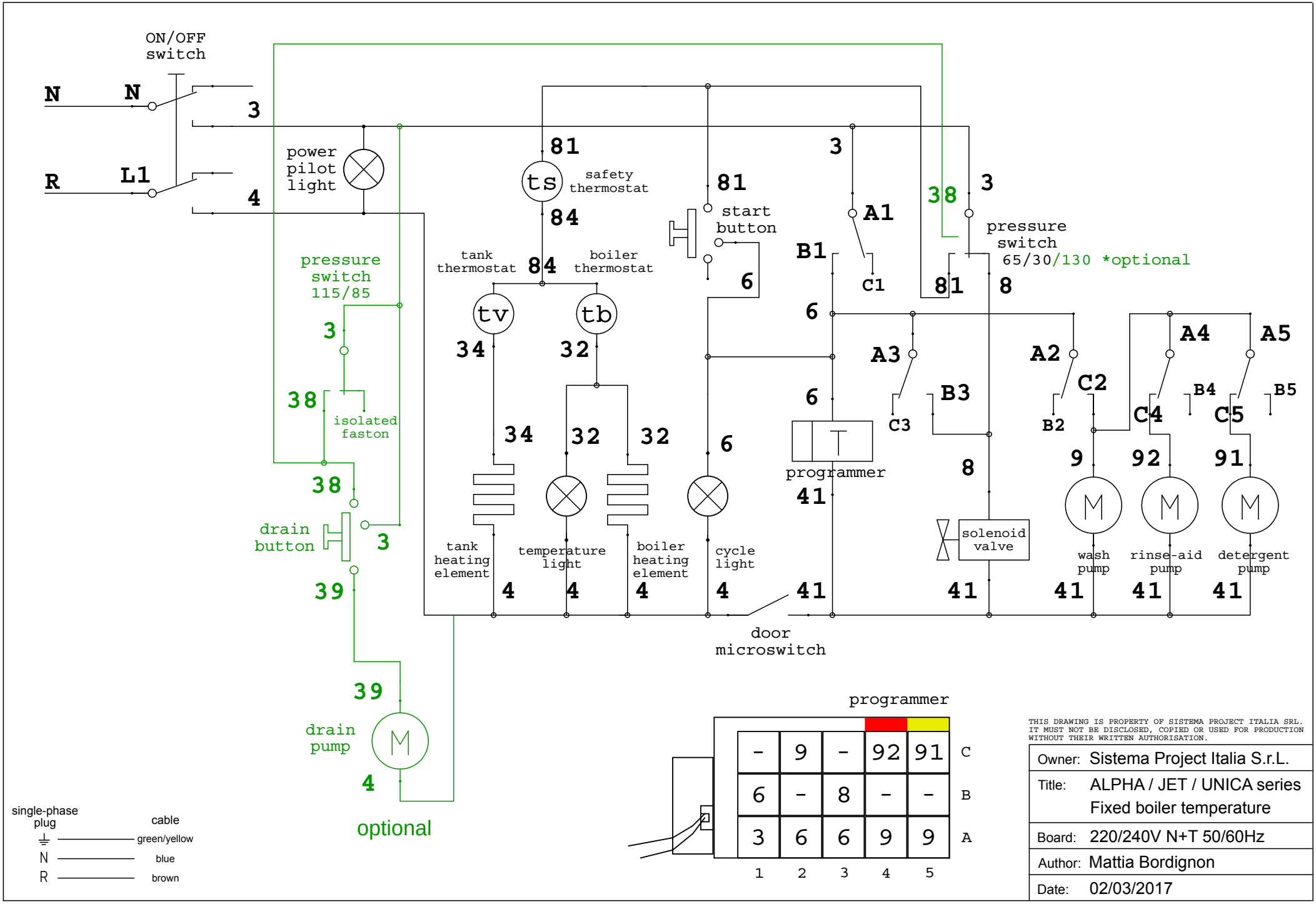

-	9	-	92	91	C
6	-	8	-	-	B
3	6	6	9	9	A

THIS DRAWING IS PROPERTY OF SISTEMA PROJECT ITALIA SRL. IT MUST NOT BE DISCLOSED, COPIED OR USED FOR PRODUCTION WITHOUT THEIR WRITTEN AUTHORISATION.

Owner:	Sistema Project Italia S.r.L.
Title:	ALPHA / JET / UNICA series Fixed boiler temperature
Board:	220/240V N+T 50/60Hz
Author:	Mattia Bordignon
Date:	02/03/2017

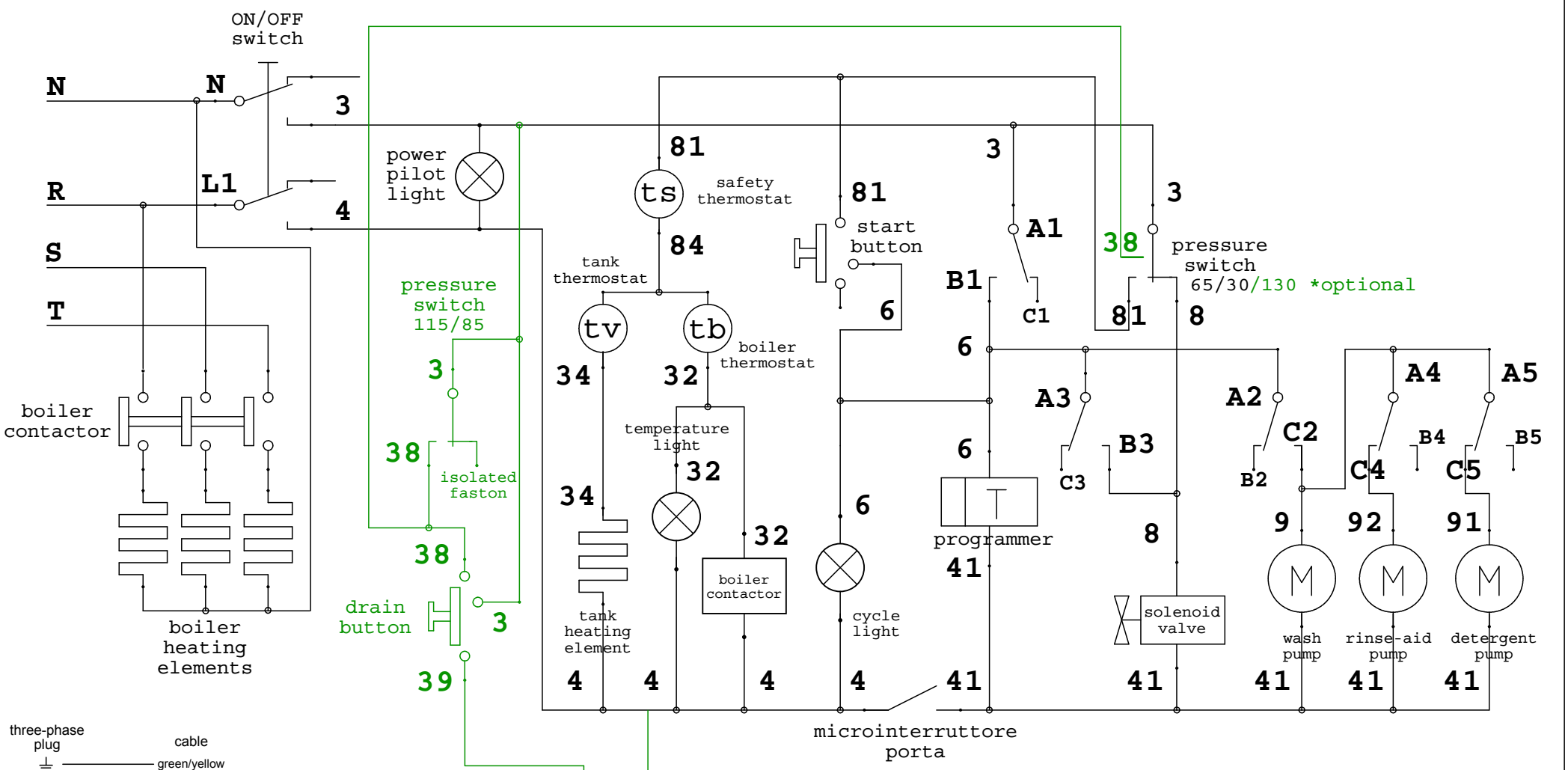

three-phase plug

	cable
⏚	green/yellow
N	blue
R	brown
S	black
T	grey

single-phase plug

	cable
⏚	green/yellow
N	blue
R	brown
	black
	grey

programmer

	1	2	3	4	5
C	-	9	-	92	91
B	6	-	8	-	-
A	3	6	6	9	9

THIS DRAWING IS PROPERTY OF SISTEMA PROJECT ITALIA SRL. IT MUST NOT BE DISCLOSED, COPIED OR USED FOR PRODUCTION WITHOUT THEIR WRITTEN AUTHORISATION.

Owner:	Sistema Project Italia S.r.L.
Title:	ALPHA / JET / UNICA series Fixed boiler temperature
Board:	380/400V 3N+T 50/60Hz
Author:	Mattia Bordignon
Date:	02/03/2017

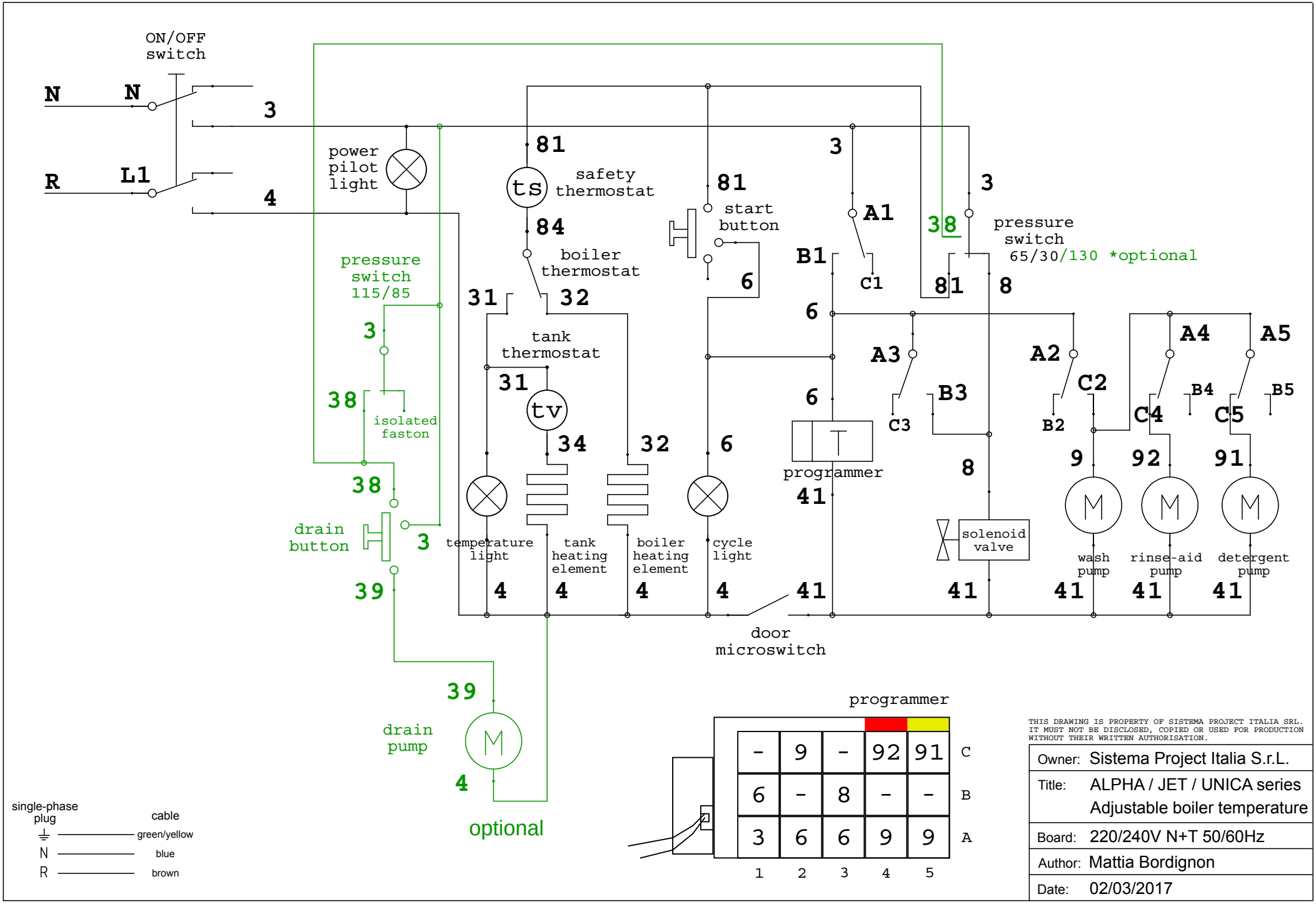

-	9	-	92	91	C
6	-	8	-	-	B
3	6	6	9	9	A

THIS DRAWING IS PROPERTY OF SISTEMA PROJECT ITALIA SRL. IT MUST NOT BE DISCLOSED, COPIED OR USED FOR PRODUCTION WITHOUT THEIR WRITTEN AUTHORISATION.

Owner:	Sistema Project Italia S.r.L.
Title:	ALPHA / JET / UNICA series Adjustable boiler temperature
Board:	220/240V N+T 50/60Hz
Author:	Mattia Bordignon
Date:	02/03/2017

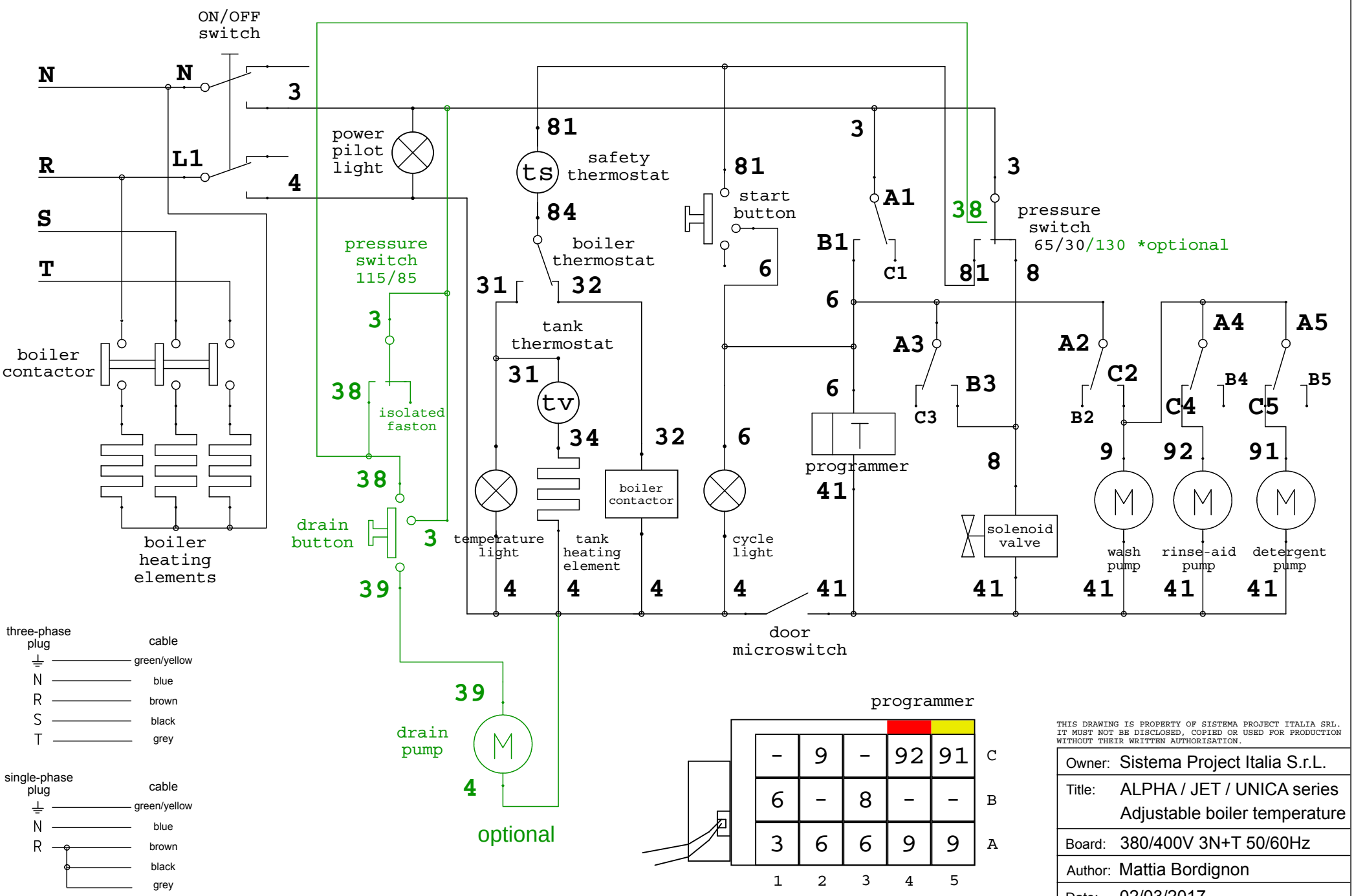
ON/OFF switch
N
R
S
T
L1
3
4
power pilot light
81
ts
safety thermostat
84
boiler thermostat
31
32
tank thermostat
tv
34
boiler contactor
6
start button
A1
C1
B1
38
pressure switch 65/30/130 *optional
8
A2
B2
C2
A3
C3
B3
A4
B4
C4
A5
B5
C5
9
92
91
programmer
41
solenoid valve
wash pump
rinse-aid pump
detergent pump
pressure switch 115/85
isolated faston
drain button
39
temperature light
tank heating element
cycle light
door microswitch
drain pump
optional
boiler contactor
boiler heating elements
three-phase plug
cable
green/yellow
blue
brown
black
grey
single-phase plug
programmer
THIS DRAWING IS PROPERTY OF SISTEMA PROJECT ITALIA SRL. IT MUST NOT BE DISCLOSED, COPIED OR USED FOR PRODUCTION WITHOUT THEIR WRITTEN AUTHORISATION.
Owner: Sistema Project Italia S.r.L.
Title: ALPHA / JET / UNICA series Adjustable boiler temperature
Board: 380/400V 3N+T 50/60Hz
Author: Mattia Bordignon
Date: 02/03/2017